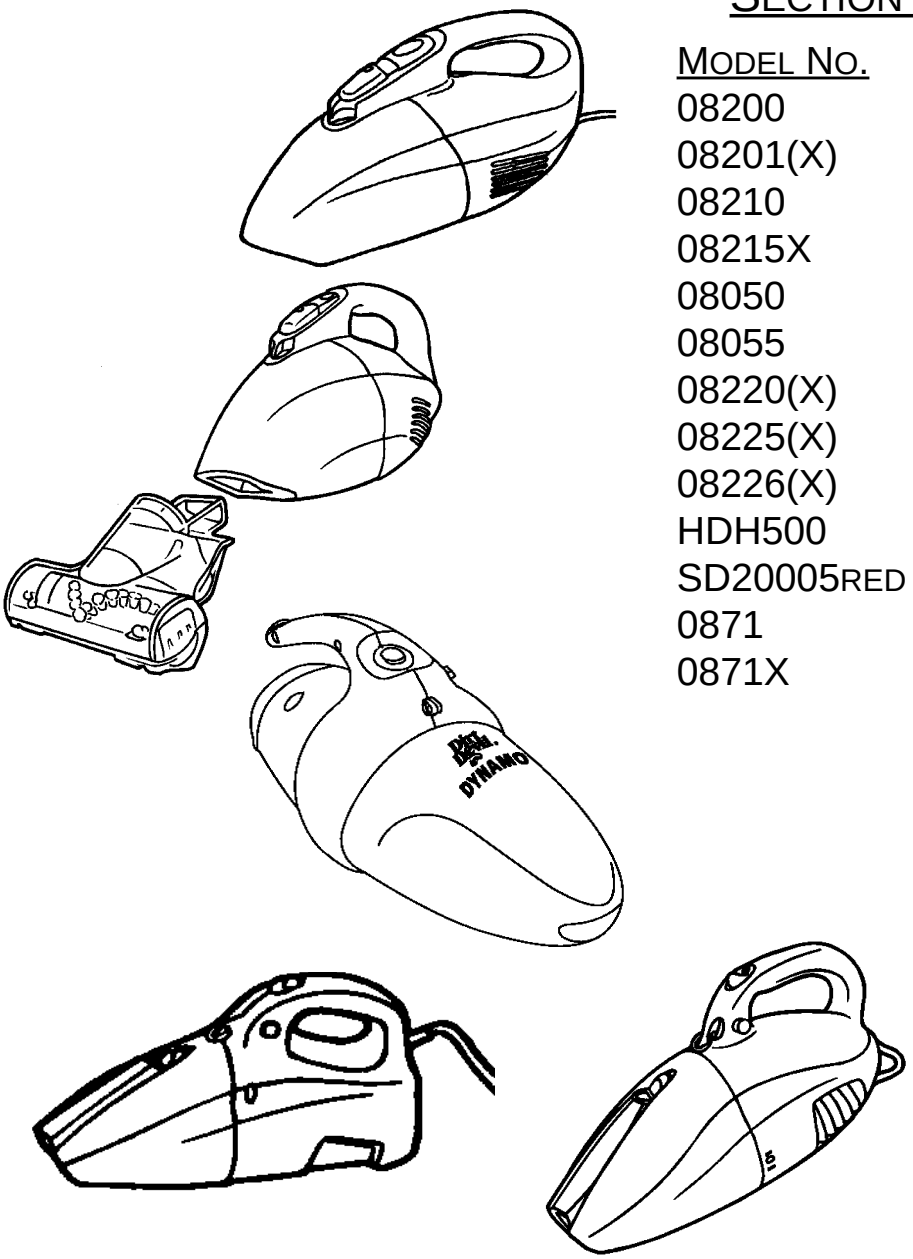

SECTION CONTENTS

MODEL NO.	PAGE NO.
08200	4-2 THRU 4-4
08201(X)	4-2 THRU 4-4
08210	4-2 THRU 4-4
08215X	4-2 THRU 4-4
08050	4-5 THRU 4-6
08055	4-5 THRU 4-6
08220(X)	4-7 THRU 4-8
08225(X)	4-7 THRU 4-8
08226(X)	4-7 THRU 4-8
HDH500	4-7 THRU 4-8
SD20005RED	4-7 THRU 4-8
0871	4-9 THRU 4-10
0871X	4-9 THRU 4-10

MODEL NO.

08050
08055
08200
08201(X)
08210
08215X
08220(X)
08225(X)
08226(X)
0871
0871X
HDH500
SD20005RED

* PRICING, SPECIFICATION'S, AND PRODUCT AVAILABILITY ARE SUBJECT TO CHANGE WITHOUT NOTICE. PRICING IS FOB FACTORY, GLENWILLOW, OH
* ALL INFORMATION CONTAINED WITHIN THIS SERVICE MANUAL IS PROPRIETARY INFORMATION OF TTI FLOOR CARE NORTH AMERICA.
* **WARNING:** TO REDUCE THE RISK OF ELECTRICAL SHOCK OR INJURY, ALWAYS DISCONNECT THE APPLIANCE CORD FROM THE ELECTRICAL OUTLET OR REMOVE BATTERY PRIOR TO SERVICING THE UNIT.

ASSEMBLY SCHEMATIC

MODEL NO.

08200
08201(X)
08210
08215X

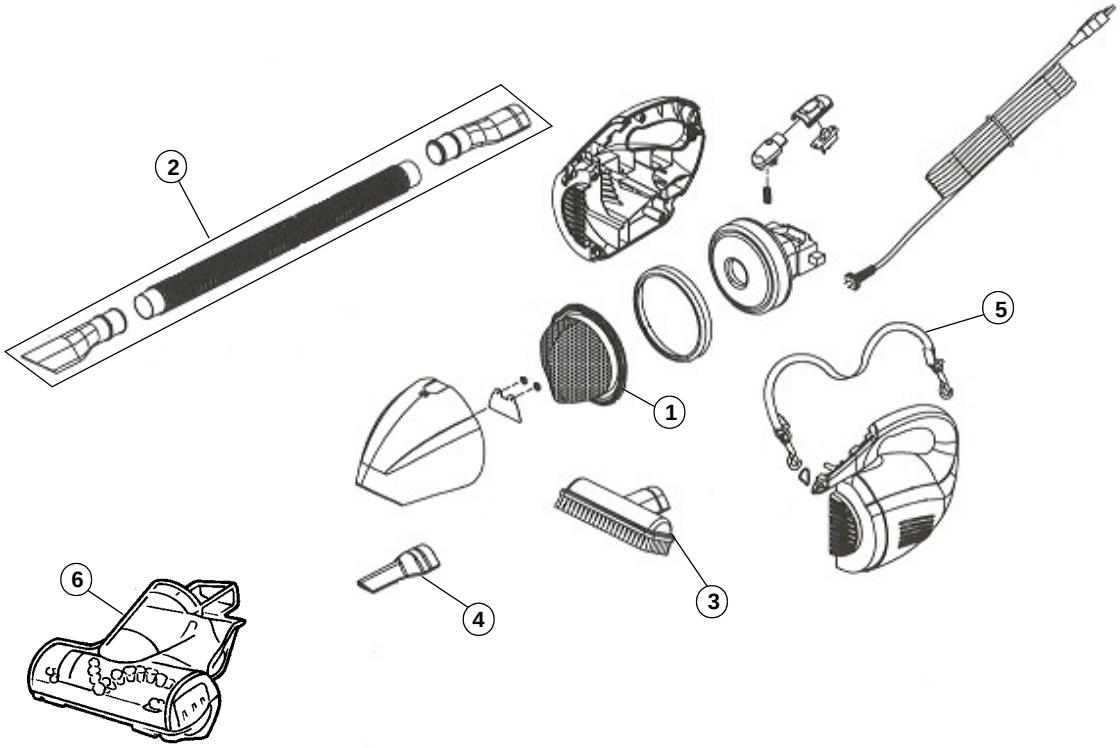

PARTS LIST

MODEL NO.

08200
08201(X)
08210
08215X

Item	Part Number	Model's To Fit	Part Description
1	3200550001	08200, 08201, 08210, 08215X	FILTER PACKAGE
	3DEA950001	08200, 08201, 08210, 08215X	F-5 FILTER - ONLY 2 PACK ALSO NEED # 7 FILTER ADAPTOR
2	2200560600	08200, 08201	FLEXIBLE HOSE ASSEMBLY
	2082132600	08210, 08215X	FLEXIBLE HOSE ASSEMBLY
3	2200570600	08200, 08201	FLOOR BRUSH ASSEMBLY
	2082170600	08210, 08215X	FLOOR BRUSH ASSEMBLY
4	1200580600	08200, 08201	CREVICE TOOL
	1082131600	08210, 08215X	CREVICE TOOL
5	2200585000	08200, 08201, 08210, 08215X	SHOULDER STRAP
6	2082115000	08210, 08215X	TURBO TOOL
7	1DAA900B00	08200, 08201, 08210, 08215X	FILTER ADAPTOR

WIRING SCHEMATIC

MODEL NO.

08200
08201(X)
08210
08215X

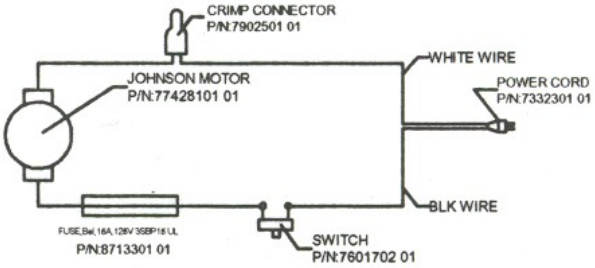

SCHEMATIC DIAGRAM

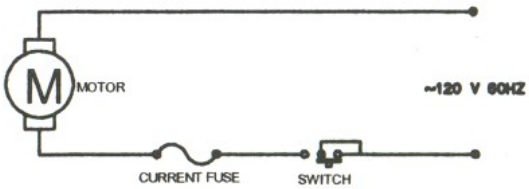

CIRCUIT DIAGRAM

ASSEMBLY SCHEMATIC

MODEL NO.

08050
08055

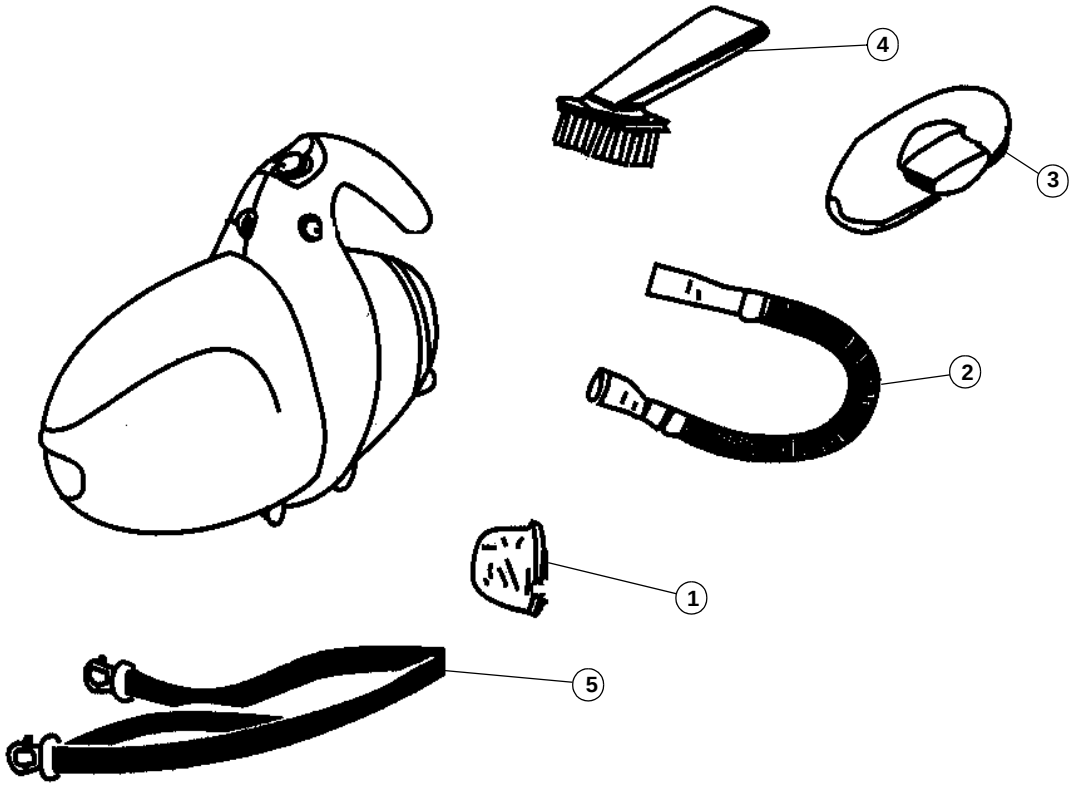

PARTS LIST

MODEL NO.

08050
08055

Item	Part Number	Model's To Fit	Part Description
1	2805000000	08050, 08055	FILTER PACKAGE
2		08050, 08055	FLEXIBLE HOSE ASSEMBLY
3		08050, 08055	UPHOLSTRY BRUSH ASSEMBLY
4		08050, 08055	CREVICE BRUSH
5		08050, 08055	SHOULDER STRAP

ASSEMBLY SCHEMATIC

MODEL NO.

08220(X)
08225(X)
08226(X)
HDH500
SD20005RED

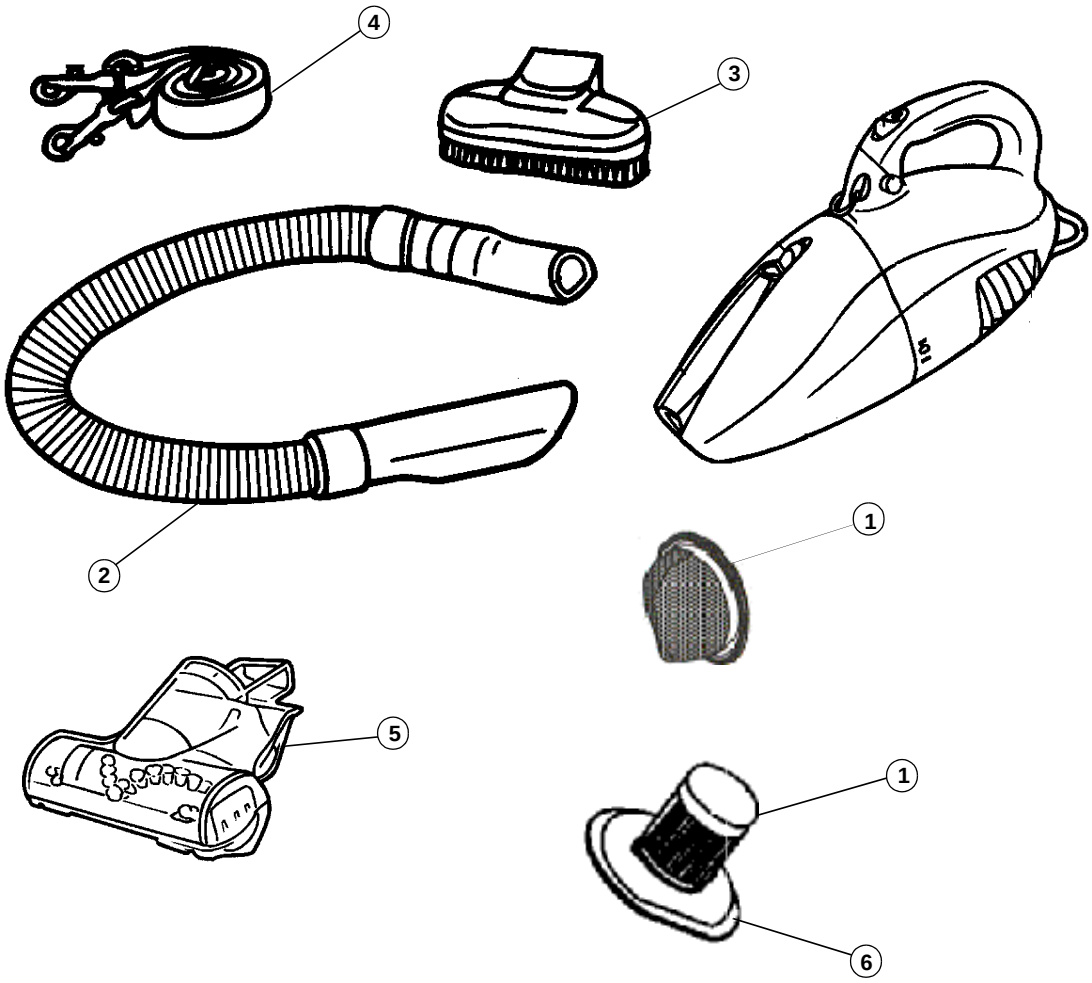

PARTS LIST

Item	Part Number	Model's To Fit	Part Description
1	3DE0900001	ALL	F-5A FILTER WITH ADAPTOR - 2 PACK
	3DEA950001	ALL	F-5 FILTER - ONLY 2 PACK ALSO NEED # 6 FILTER ADAPTOR
2		ALL	FLEXIBLE HOSE ASSEMBLY
3		ALL	UPHOLSTRY BRUSH ASSEMBLY
4	2200585000	ALL	SHOULDER STRAP
5		08225	TURBO TOOL
6	1DEA900B00	ALL	FILTER ADAPTOR - ONLY

MODEL NO.

08220(X)
08225(X)
08226(X)
HDH500
SD20005RED

ASSEMBLY SCHEMATIC

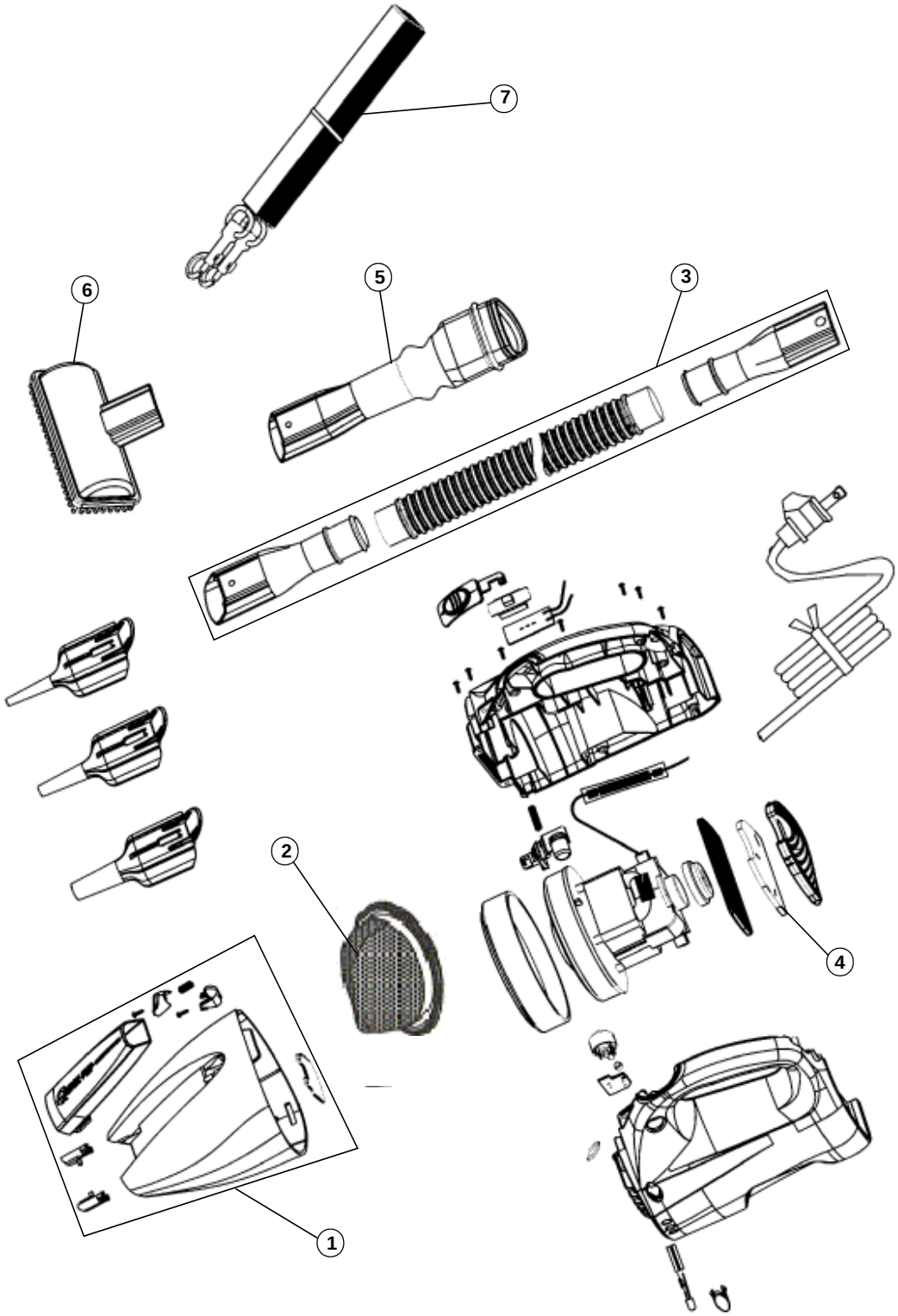

MODEL NO.

0871
0871X

PARTS LIST

MODEL NO.

0871
0871X

Item	Part Number	Model's To Fit	Part Description
1	2DK1000000	0871, 0871X	DIRT CUP ASSEMBLY
2	3DEA950001	0871, 0871X	F-5 FILTER - ONLY 2 PACK ALSO NEED FILTER ADAPTOR
	3DE0900001	0871, 0871X	F-5A FILTER WITH ADAPTOR - 2 PACK
	1DEA900B00	0871, 0871X	FILTER ADAPTOR ONLY
3	2DK1100000	0871, 0871X	HOSE ASSEMBLY
4	1DK1010000	0871, 0871X	EXHAUST FILTER
5	1DK1020000	0871, 0871X	BLOWER ADAPTOR
6	1DK1030000	0871, 0871X	UPHOLSTERY TOOL
7	1DK1060000	0871, 0871X	SHOULDER STRAP