SECTION CONTENTS

MODEL NO.	PAGE NO.
U8311900	10-2 THRU 10-7
UH30065	10-2 THRU 10-7

MODEL NO.

U8311900
UH30065

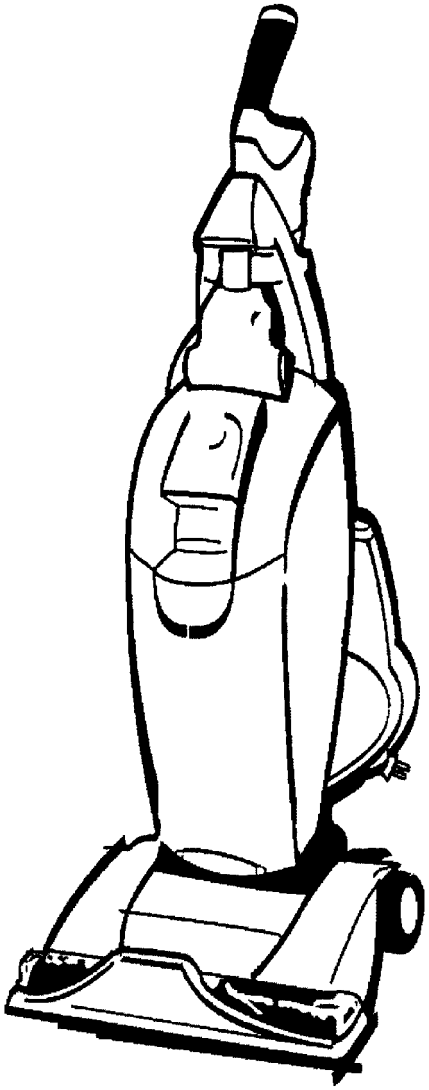

* PRICING, SPECIFICATION'S, AND PRODUCT AVAILABILITY ARE SUBJECT TO CHANGE WITHOUT NOTICE. PRICING IS FOB FACTORY, CANTON, OH
* ALL INFORMATION CONTAINED WITHIN THIS SERVICE MANUAL IS PROPRIETARY INFORMATION OF TTI FLOOR CARE NORTH AMERICA.
* **WARNING:** TO REDUCE THE RISK OF ELECTRICAL SHOCK OR INJURY, ALWAYS DISCONNECT THE APPLIANCE CORD FROM THE ELECTRICAL OUTLET OR REMOVE BATTERY PRIOR TO SERVICING THE UNIT.

ASSEMBLY SCHEMATIC

MODEL NO.

U8311900
UH30065

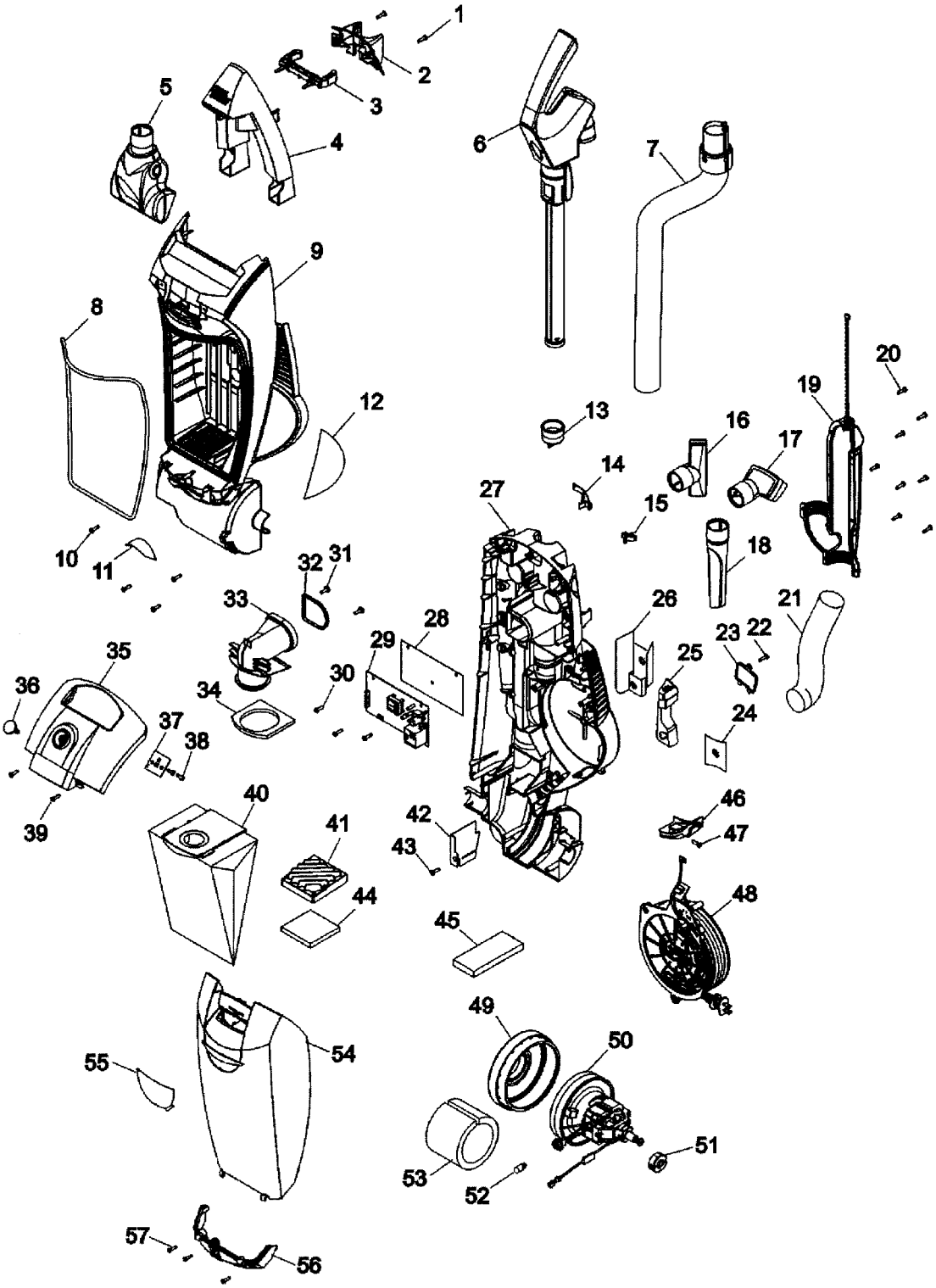

PART LISTING / PRICE LIST

MODEL NO.

U8311900
UH30065

ITEM	PART NUMBER	MODELS TO FIT	PART DESCRIPTION
1	21447242	U8311900, UH30065	SCREW - SELF TAPPING
2	91001121	U8311900, UH30065	WAND RELEASE LATCH RETAINER - SILVER SAND MEDIUM
3	38567060	U8311900, UH30065	WAND RELEASE LATCH - SANDSTONE GRAY
4	39467083	U8311900, UH30065	UPPER HANDLE COVER - SILVER SAND MED
5	49129044	U8311900, UH30065	TURBINE TOOL - SMOKE TRANSLUCENT
6	48642100	U8311900, UH30065	UPPER HANDLE / WAND ASSEMBLY - BLACK HANDLE GRIP
7	43431232	U8311900, UH30065	HOSE ASSEMBLY - BLACK
8	38781107	U8311900, UH30065	BAG DOOR SEAL
9	37255042	U8311900, UH30065	FRONT BAG HOUSING - ARCTIC WHITE
10	21447242	U8311900, UH30065	SCREW - SELF TAPPING
11	91001151	U8311900, UH30065	REFLECTOR
12	51639209	U8311900, UH30065	CORD REEL NAME PLATE
13	92001290	U8311900, UH30065	WAND RETAINER - BLACK
14	36172038	U8311900, UH30065	HOSE CLIP - SILVER SAND MEDIUM
15	36172039	U8311900, UH30065	CORD CLIP - BLACK
16	38614045	U8311900, UH30065	FURNITURE NOZZLE - BLACK
17	43414197	U8311900, UH30065	DUSTING BRUSH ASSEMBLY - BLACK
18	38617033	U8311900, UH30065	CREVICE TOOL - BLACK
19	47823014	U8311900, UH30065	MICRO / DUCT ASSEMBLY
20	21447242	U8311900, UH30065	SCREW - SELF TAPPING
21	91001177	U8311900, UH30065	LOWER HOSE
22	21447242	U8311900, UH30065	SCREW - SELF TAPPING
23	37257317	U8311900, UH30065	FILTER COVER PLATE - SILVER SAND MED
24	36913045	U8311900, UH30065	INSULATOR
25	38422134	U8311900, UH30065	CORD REEL RELEASE LEVER - BLACK
26	36913044	U8311900, UH30065	WIRE INSULATOR
27	37255041	U8311900, UH30065	BACK BAG HOUSING
28	91001123	U8311900, UH30065	INSULATOR
29	46851065	U8311900, UH30065	PCB BOARD - POWER
30	21447242	U8311900, UH30065	SCREW - SELF TAPPING
31		U8311900, UH30065	TAPPING SCREW
32	38781108	U8311900, UH30065	UPPER DIRT DUCT SEAL
33	38643024	U8311900, UH30065	UPPER DIRT DUCT - BLACK
34	38785027	U8311900, UH30065	DIRT DUCT GASKET

PART LISTING / PRICE LIST

MODEL NO.

U8311900
UH30065

ITEM	PART NUMBER	MODELS TO FIT	PART DESCRIPTION
35	37246163	U8311900, UH30065	CONTROL PANEL COVER - ARCTIC WHITE
36	90001353	U8311900, UH30065	POWER BUTTON
37	91001163	U8311900, UH30065	PCB BOARD - ON/OFF SWITCH
38	21447242	U8311900, UH30065	SCREW - SELF TAPPING
39	21447242	U8311900, UH30065	SCREW - SELF TAPPING
40	43655114	U8311900, UH30065	TYPE W2 HEPA BAG
	36425086	U8311900, UH30065	BAG MOUNTING PLATE - BLACK
41	38765029	U8311900, UH30065	SECONDARY / INLET FILTER RETAINER - BLACK
42	36913046	U8311900, UH30065	WIRE INSULATOR
43	21447242	U8311900, UH30065	SCREW - SELF TAPPING
44	38765031	U8311900, UH30065	SECONDARY / INLET FILTER
45	38765030	U8311900, UH30065	FINAL / EXHAUST FILTER
46		U8311900, UH30065	CORD CATCH
47	21447242	U8311900, UH30065	SCREW - SELF TAPPING
48	46833002	U8311900, UH30065	CORD REEL ASSEMBLY
49	91001148	U8311900, UH30065	MOTOR SEAL
50	27212067	U8311900, UH30065	MOTOR ASSEMBLY
51	36322030	U8311900, UH30065	MOTOR MOUNT - SMALL
52	27313107	U8311900, UH30065	BULB
53	91001152	U8311900, UH30065	FOAM MOTOR MUFFLER
54	37254273	U8311900	FRONT BAG DOOR ASSEMBLY - HYPER GREEN
	37254301	UH30065	FRONT BAG DOOR ASSEMBLY - BLUE
55	51632019	U8311900, UH30065	FRONT BAG DOOR NAME PLATE
56		U8311900, UH30065	LENS
57	21447228	U8311900, UH30065	SCREW - SELF TAPPING

ASSEMBLY SCHEMATIC

MODEL NO.

U8311900
UH30065

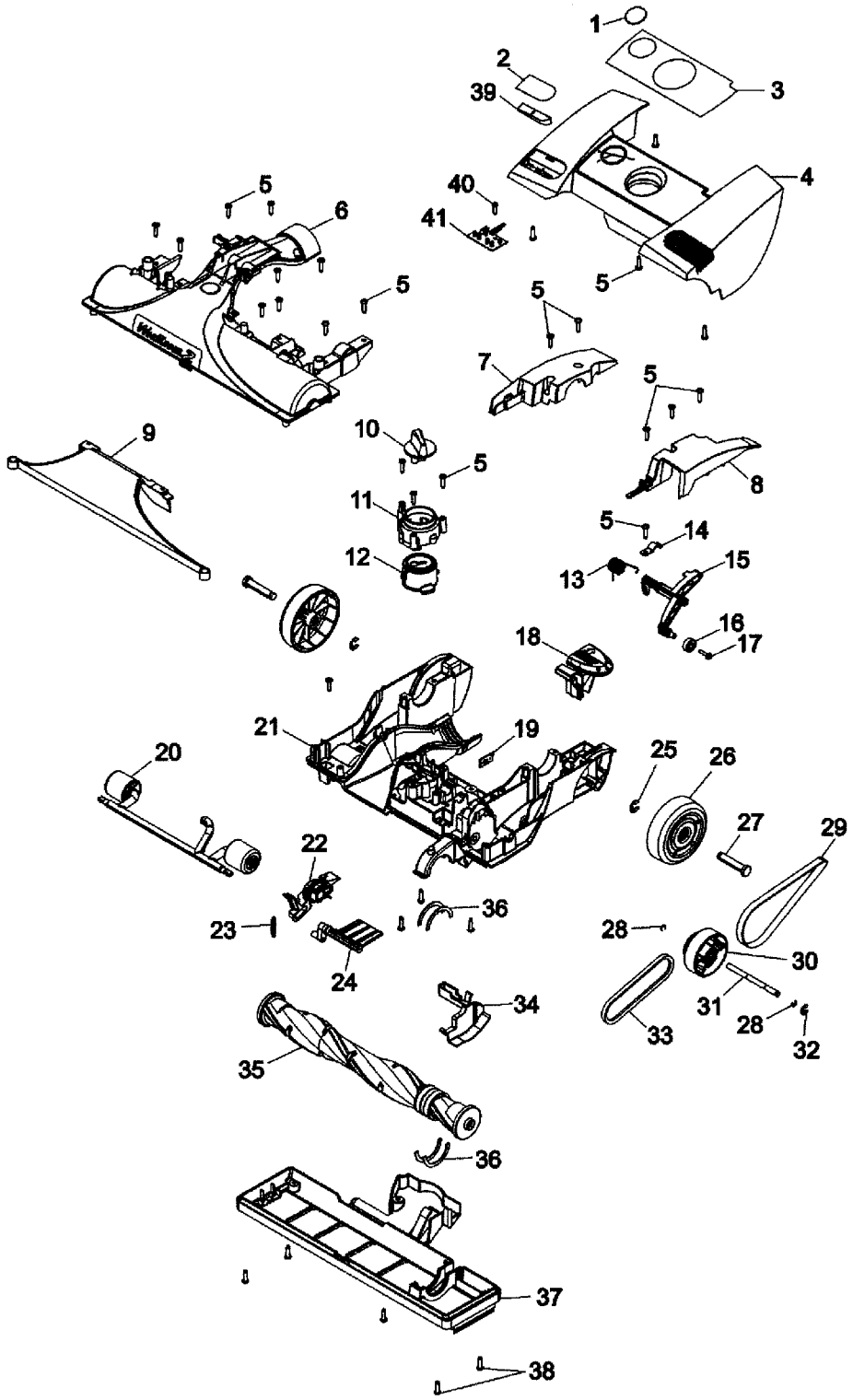

PART LISTING / PRICE LIST

MODEL NO.

U8311900
UH30065

ITEM	PART NUMBER	MODELS TO FIT	PART DESCRIPTION
1	51661020	U8311900, UH30065	MEDALLION
2	51464005	U8311900, UH30065	EDF LABEL
3	91001169	U8311900, UH30065	HOOD / NOZZLE COVER NAME PLATE
4	91001131	U8311900, UH30065	HOOD / NOZZLE COVER - ARCTIC WHITE
5	21447242	U8311900, UH30065	SCREW - SELF TAPPING
6	37243060	U8311900, UH30065	AGITATOR / BRUSH ROLL HOUSING
7	36131139	U8311900, UH30065	TRUNNION COVER - RIGHT SILVER SAND
8	36131140	U8311900, UH30065	TRUNNION COVER - LEFT SILVER SAND
9	37243065	U8311900	NOZZLE HOUSING LINER - HYPER GREEN
	37243080	UH30065	NOZZLE HOUSING LINER - BLUE
10	91001134	U8311900, UH30065	HEIGHT ADJUSTMENT KNOB - SANDSTONE
11	91001138	U8311900, UH30065	HEIGHT ADJUSTMENT CAM - BLACK
12		U8311900, UH30065	CAM HOLDER
13	38356014	U8311900, UH30065	TORSION SPRING
14	36171058	U8311900, UH30065	ACTUATOR ARM TRUNNION
15	38458083	U8311900, UH30065	IDLER PULLEY ARM
16	24142022	U8311900, UH30065	BEARING
17	21479450	U8311900, UH30065	SCREW - SELF TAPPING
18	38434026	U8311900, UH30065	HANDLE RELEASE LEVER - BLACK
19	46851067	U8311900, UH30065	PCB HALL ASSEMBLY
20	91001159	U8311900, UH30065	FRONT AXLE ASSEMBLY
21	91001156	U8311900, UH30065	MAIN BODY / NOZZLE BASE - SILVER SAND MEDIUM
22	42246150	U8311900, UH30065	VALVE ARM AND AGITATOR HOUSING **INCLUDES #6**
23	38331006	U8311900, UH30065	SPRING - TURBINE ACTUATOR
24	91001142	U8311900, UH30065	VALVE DOOR - BLACK
25	160017--	U8311900, UH30065	LOCK RING
26	521960001	U8311900, UH30065	REAR WHEEL ASSEMBLY
27	32434007	U8311900, UH30065	REAR AXLE
28	91001106	U8311900, UH30065	RETAINING RING
29	38528050	U8311900, UH30065	V-BELT
30	43241009	U8311900, UH30065	TRANSFER PULLEY
31	91001110	U8311900, UH30065	TRANSFER PULLEY SHAFT
32	91001107	U8311900, UH30065	RETAINING RING

PART LISTING / PRICE LIST

MODEL NO.

U8311900
UH30065

ITEM	PART NUMBER	MODELS TO FIT	PART DESCRIPTION
33	38528034	U8311900, UH30065	V - BELT
34	91001128	U8311900, UH30065	BELT COVER - BLACK
35	48414160	U8311900, UH30065	AGITATOR / BRUSH ROLL ASSEMBLY
36	38781053	U8311900, UH30065	AGITATOR / BRUSH ROLL PULLEY SEAL
37	42246146	U8311900, UH30065	BOTTOME PLATE / NOZZLE GUARD - BLACK
38	214793DA	U8311900, UH30065	SCREW
39		U8311900, UH30065	EDF LENS
40	214793DA	U8311900, UH30065	SCREW
41	46851060	U8311900, UH30065	EDF CIRCUIT BOARD
	47811008	U8311900, UH30065	STATIC WIRE ASSEMBLY