COMMERCIAL

Twin Chamber

WindTunnel™

4

SECTION CONTENTS

MODEL NO.	PAGE NO.
C1660-900	4-2 THRU 4-6
C1710-900	4-7 THRU 4-11
C1701	4-12 THRU 4-16

MODEL NO.

C1660-900
C1701
C1710-900

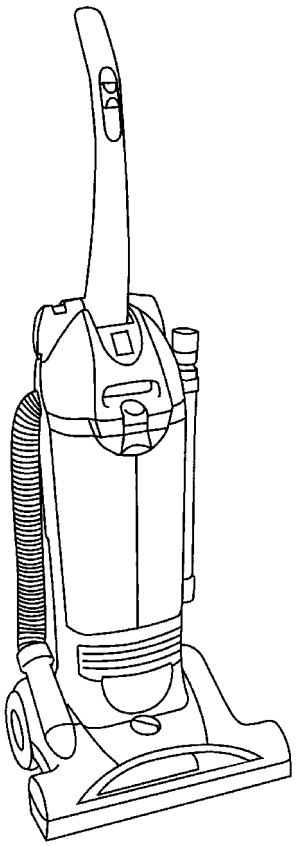

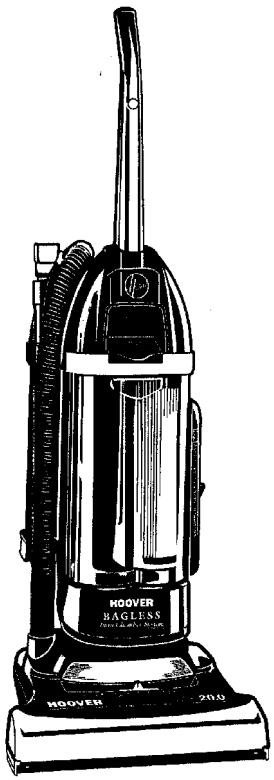

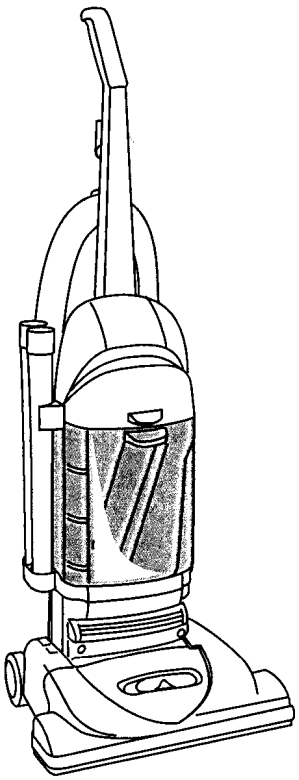

* PRICING, SPECIFICATION'S, AND PRODUCT AVAILABILITY ARE SUBJECT TO CHANGE WITHOUT NOTICE. PRICING IS FOB FACTORY, CANTON, OH
* ALL INFORMATION CONTAINED WITHIN THIS SERVICE MANUAL IS PROPRIETARY INFORMATION OF TTI FLOOR CARE NORTH AMERICA.
* **WARNING:** TO REDUCE THE RISK OF ELECTRICAL SHOCK OR INJURY, ALWAYS DISCONNECT THE APPLIANCE CORD FROM THE ELECTRICAL OUTLET OR REMOVE BATTERY PRIOR TO SERVICING THE UNIT.

ASSEMBLY SCHEMATIC

MODEL NO.

C1660-900

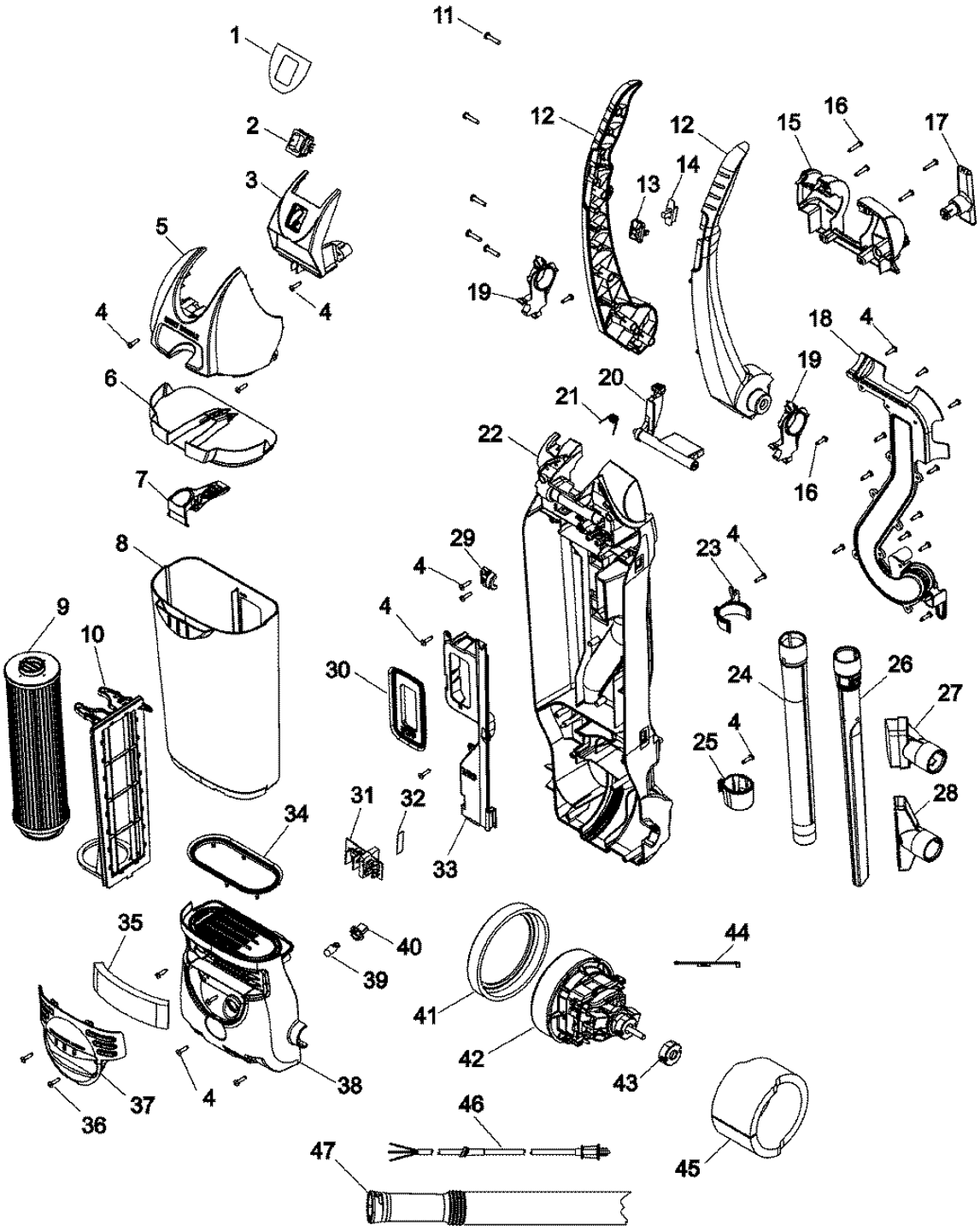

PARTS LISTING

MODEL NO.
C1660-900

ITEM	PART NUMBER	MODELS TO FIT	PART DESCRIPTION
1	92001029	C1660-900	SWITCH MOUNT COVER - NAME PLATE
2	28166001	C1660-900	SWITCH
3	92001009	C1660-900	SWITCH MOUNT - BLACK
4	21447242	C1660-900	SCREW - SELF TAPPING
5	92001013	C1660-900	HANDLE COVER / CARRYING HANDLE
6	37249051	C1660-900	DIRT CUP LID
7	36151049	C1660-900	LATCH ACTUATOR LID - BLACK
8	38775115	C1660-900	DIRT CUP - TRANSPARENT GRAY
9	40140201	C1660-900	CARTRIDGE FILTER - DIRT CUP
10	36426067	C1660-900	PRE-FILTER SUPPORT ASSEMBLY - MAGNESIUM GRAY
11	21447269	C1660-900	SCREW
12	92001014	C1660-900	UPPER HANDLE ASSEMBLY - BLACK
13	91001051	C1660-900	SURGE BUTTON - GRAPHITE GRAY
14	28179106	C1660-900	SURGE SWITCH WITH LEADS
15	92001008	C1660-900	HANDLE RETAINER COVER
16	21447072	C1660-900	SCREW
17	90001100	C1660-900	CORD WRAP - DARK CHARCOAL GRAY
18	92001012	C1660-900	DIRT DUCT COVER - BLACK
19	36131121	C1660-900	TRUNNION - UPPER HANDLE
20	92001063	C1660-900	PIVOT LATCH LEVER - GRAPHITE GRAY
21	38355016	C1660-900	PIVOT LATCH SPRING
22	92001010	C1660-900	BACK PANEL / DIRT CUP HOUSING - BLACK
23	36433209	C1660-900	UPPER WAND HOLDER - BLACK
24	38634092	C1660-900	EXTENSION TUBE - 14” - MAGNESIUM GRAY
25	92001004	C1660-900	LOWER WAND HOLDER - BLACK
26	38617031	C1660-900	CREVICE TOOL - LONG MAGNESIUM GRAY
27	43414197	C1660-900	DUSTING BRUSH ASSEMBLY - BLACK
28	38614044	C1660-900	FURNITURE NOZZLE - GRAPHITE GRAY
29	27478611	C1660-900	STRAIN RELIEF
30	38785020	C1660-900	INLET SEAL - DIRT CUP
31	46851035	C1660-900	PCB ASSEMBLY
32	34123058	C1660-900	PCB SUPPORT
33	92001007	C1660-900	WIRE CHANNEL COVER
34	38785021	C1660-900	EXHAUST SEAL - BLACK
35	38765024	C1660-900	FINAL FILTER / EXHAUST

PARTS LISTING

MODEL NO.
C1660-900

ITEM	PART NUMBER	MODELS TO FIT	PART DESCRIPTION
36	21447228	C1660-900	SCREW - SELF TAPPING
37	39383152	C1660-900	LENS / FINAL FILTER RETAINER - TRANSPARENT GRAY LIGHT
38	92001005	C1660-900	MOTOR COVER - BLACK
39	27313107	C1660-900	BULB
40	27341505	C1660-900	LAMP SOCKET ASSEMBLY
41	36322037	C1660-900	MOTOR MOUNT - LARGE
42	27212070	C1660-900	MOTOR ASSEMBLY
43	36322030	C1660-900	MOTOR MOUNT - SMALL
44	28382097	C1660-900	THERMAL PROTECTOR
45	39411001	C1660-900	FOAM MOTOR MUFFLER
46	91001011	C1660-900	POWER CORD
	46583169	C1660-900	EXTENSION CORD - 35’
47	43431224	C1660-900	HOSE ASSEMBLY

ASSEMBLY SCHEMATIC

MODEL NO.

C1660-900

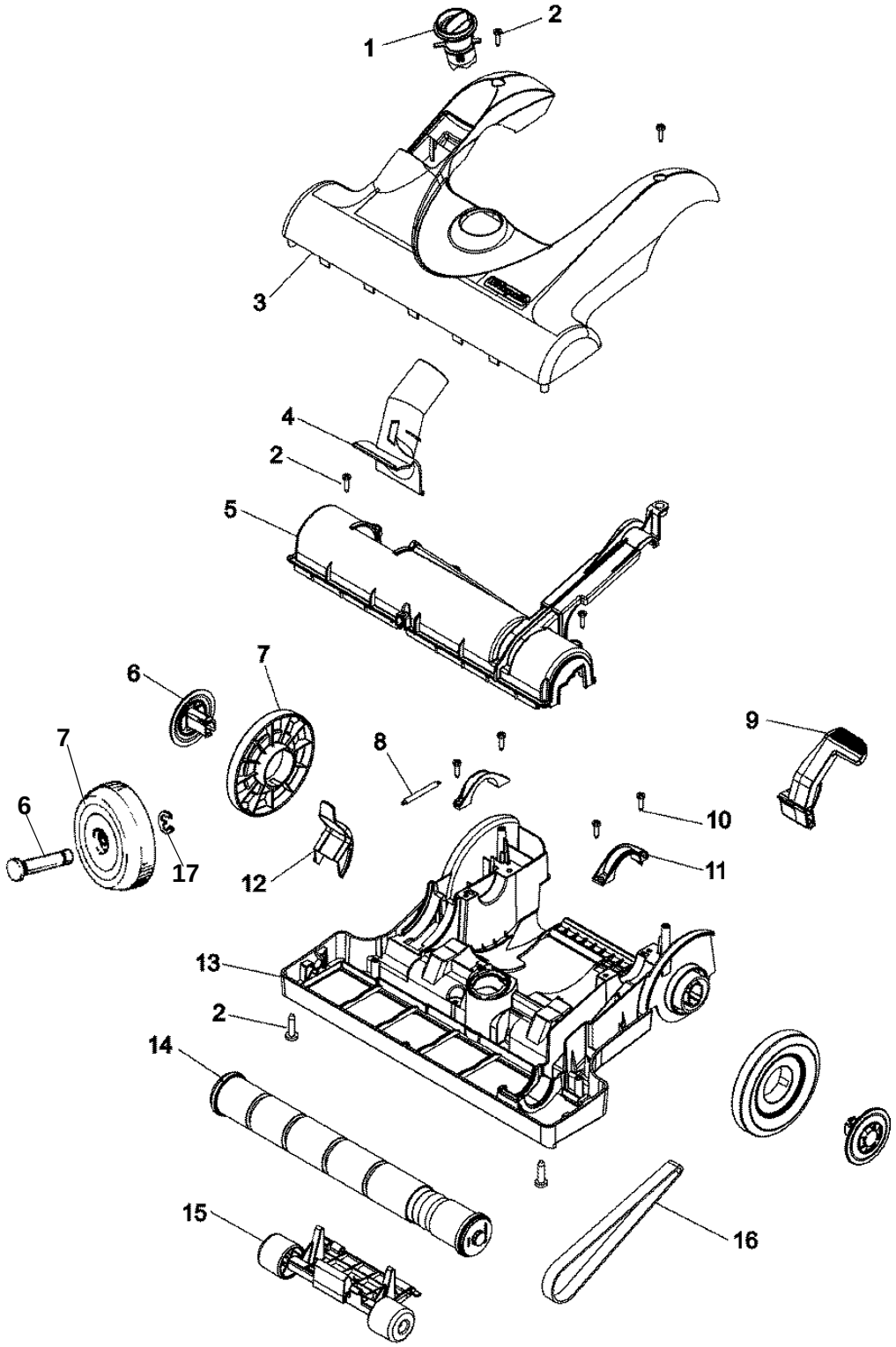

PARTS LISTING

MODEL NO.
C1660-900

ITEM	PART NUMBER	MODELS TO FIT	PART DESCRIPTION
1	92001011	C1660-900	NOZZLE HEIGHT ADJUSTMENT CAM - GRAPHITE GRAY
2	21447072	C1660-900	SCREW
3	92001006	C1660-900	HOOD / NOZZLE COVER - 15" BLACK
4	38646087	C1660-900	LOWER DUCT - MAGNESIUM GRAY
5	37243047	C1660-900	AGITATOR HOUSING
6	37912018	C1660-900	WHEEL HUB - SNAP IN
	32434019	C1660-900	WHEEL AXLE
7	38522086	C1660-900	REAR WHEEL - SNAP IN
	38522091	C1660-900	REAR WHEEL - MAGNESIUM GRAY
	522206001	C1660-900	REAR WHEEL - BLACK
8	38335026	C1660-900	DEBRIS DOOR SPRING
9	38458070	C1660-900	HANDLE RELEASE LEVER
10	21447242	C1660-900	SCREW - SELF TAPPING
11	36131118	C1660-900	TRUNNION COVER - DARK CHARCOAL GRAY
12	37257312	C1660-900	DEBRIS DOOR - GRAPHITE GRAY
13	37242142	C1660-900	BODY / NOZZLE BASE - SNAP IN WHEELS MAGNESIUM GRAY
	37242156	C1660-900	BODY / NOZZLE BASE - AXLE WHEEL MAGNESIUM GRAY
14	48414132	C1660-900	AGITATOR ASSEMBLY - 15" WOODEN
15	43248068	C1660-900	FRONT WHEEL ASSEMBLY
16	38528040	C1660-900	BELT
17	160017--	C1660-900	E - CLIP / LOCK RING

ASSEMBLY SCHEMATIC

MODEL NO.

C1710-900

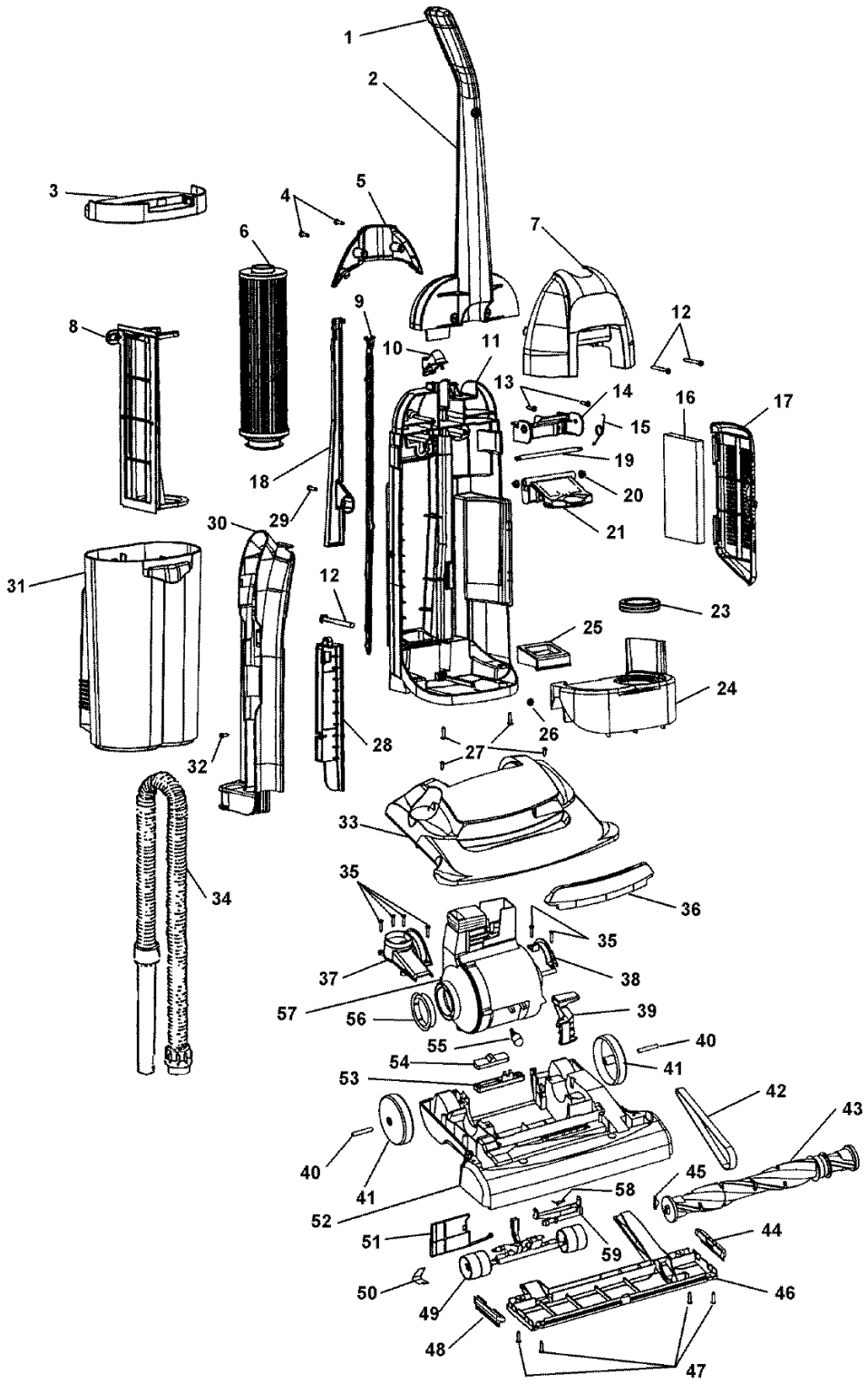

PARTS LISTING

MODEL NO.
C1710-900

ITEM	PART NUMBER	MODELS TO FIT	PART DESCRIPTION
1	37911078	C1710-900	HANDLE CAP - DARK CHARCOAL GRAY
2	39466041	C1710-900	UPPER HANDLE WITH CADDY
3	42249005	C1710-900	DIRT CUP LID
4	21447072	C1710-900	SCREW
5	37258132	C1710-900	HANDLE COVER - REAR
6	40140201	C1710-900	CARTRIDGE FILTER - DIRT CUP
7	37258160	C1710-900	HANDLE COVER - FRONT
8	36426043	C1710-900	PRE-FILTER - DIRT CUP
9	38458057	C1710-900	SWITCH ROD
10	38433036	C1710-900	ROCKER SWITCH
11	37259002	C1710-900	BACK PANEL / DIRT CUP HOUSING
12	40201189	C1710-900	HANDLE HARDWARE ASSEMBLY
13	21447072	C1710-900	SCREW
14	36153065	C1710-900	LATCH SUPPORT
15	38355013	C1710-900	SPRING
16	40110004	C1710-900	FINAL FILTER / EXHAUST - 2 PACK
	40110064	C1710-900	FINAL FILTER / EXHAUST - ALLERGEN 2 PACK
17	37257261	C1710-900	FILTER GRILL
18	37258052	C1710-900	REAR COVER - DARK CHARCOAL GRAY
19	32541004	C1710-900	LATCH SHAFT
20	36131056	C1710-900	WHEEL RETAINER
21	36153064	C1710-900	DIRT CUP LATCH
22		C1710-900	PART NOT AVAILABLE
23	38784079	C1710-900	EXHAUST SEAL
24	37249016	C1710-900	FRONT COVER
25	38783026	C1710-900	INTAKE SEAL
26	21641557	C1710-900	NUT
27	21447218	C1710-900	SCREW - SELF TAPPING
28	36923011	C1710-900	TOOL RACK GUIDE
29	21447242	C1710-900	SCREW - SELF TAPPING
30	36433145	C1710-900	TOOL RACK
31	38775072	C1710-900	DIRT CUP - TRANSPARENT
32	40201189	C1710-900	HANDLE HARDWARE ASSEMBLY
33	42252B36	C1710-900	HOOD / NOZZLE COVER
34	43434101	C1710-900	HOSE ASSEMBLY

PARTS LISTING

MODEL NO.
C1710-900

ITEM	PART NUMBER	MODELS TO FIT	PART DESCRIPTION
35	21447217	C1710-900	SCREW - SELF TAPPING
36	39383112	C1710-900	LENS
37	38656033	C1710-900	DUCT COVER
38	36131090	C1710-900	MOTOR RETAINER - LEFT
39	38458053	C1710-900	HANDLE RELEASE LEVER
40	31531008	C1710-900	WHEEL SHAFT
41	38522011	C1710-900	REAR WHEEL - BLACK
42	38528040	C1710-900	BELT
43	48414061	C1710-900	AGITATOR ASSEMBLY
44	39511004	C1710-900	LITTER PICKER - IMPERIAL RED
45	013261AY	C1710-900	RIB SHOE
46	37245035	C1710-900	BOTTOM PLATE / NOZZLE GUARD
47	21447217	C1710-900	SCREW - SELF TAPPING
48	39511004	C1710-900	LITTER PICKER - IMPERIAL RED
49	43248058	C1710-900	FRONT WHEEL ASSEMBLY
50	34572002	C1710-900	CAM ACTUATOR SPRING
51	38718005	C1710-900	VALVE GATE
52	37241166	C1710-900	MAIN BODY / NOZZLE BASE 15”
53	38567027	C1710-900	CAM ACTUATOR - DARK CHARCOAL GRAY
54	38567014	C1710-900	INDICATOR KNOB
55		C1710-900	BULB
56	38784016	C1710-900	SEAL
57	43576201	C1710-900	MOTOR ASSEMBLY WITH OUT HEADLIGHT
58	38351012	C1710-900	SPRING
59	38563013	C1710-900	NOZZLE HEIGHT ADJUSTMENT
	39441016	C1710-900	CORD CLIP - BLACK
	46388034	C1710-900	POWER CORD
	43414197	C1710-900	DUSTING BRUSH ASSEMBLY - BLACK
	38614044	C1710-900	FURNITURE NOZZLE - GRAPHITE GRAY
	38617031	C1710-900	CREVICE TOOL - LONG MAGNESIUM GRAY
	38634078	C1710-900	EXTENSION TUBE - BLACK

ASSEMBLY SCHEMATIC

MODEL NO.

C1710-900

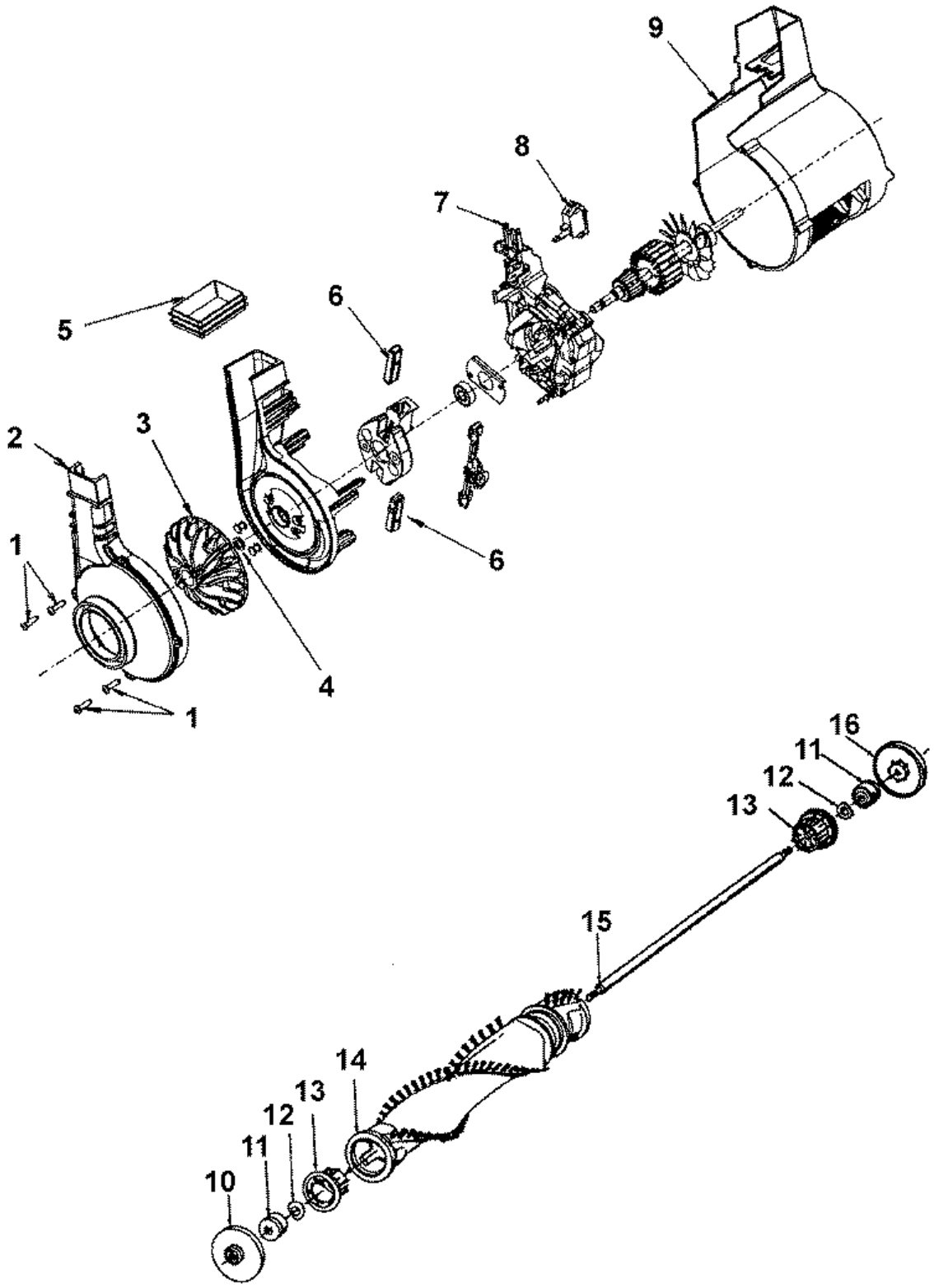

PARTS LISTING

MODEL NO.

C1710-900

ITEM	PART NUMBER	MODELS TO FIT	PART DESCRIPTION
1	214793DA	C1710-900	SCREW - SELF TAPPING 5/8”
2	38736033	C1710-900	FAN CHAMBER
3	43565006	C1710-900	FAN AND NUT ASSEMBLY
4	21312793	C1710-900	WASHER
5	38783020	C1710-900	DUCT SEAL - MOLDED
6	41311022	C1710-900	MOTOR BRUSH
7	36914006	C1710-900	SWITCH BAR
8	28161068	C1710-900	ROCKER SWITCH
9	37194049	C1710-900	MOTOR END CAP WITH HEADLIGHT
10	36423016	C1710-900	THREAD GUARD - RIGHT
11	43267002	C1710-900	AGITATOR BEARING ASSEMBLY
12	21347003	C1710-900	CONICAL WASHER
13	36422022	C1710-900	AGITATOR END
14		C1710-900	AGITATOR TUBE
15		C1710-900	AGITATOR BAR
16	36423017	C1710-900	THREAD GUARD - LEFT
	43576201	C1710-900	MOTOR ASSEMBLY WITH OUT HEADLIGHT

ASSEMBLY SCHEMATIC

MODEL NO.

C1701

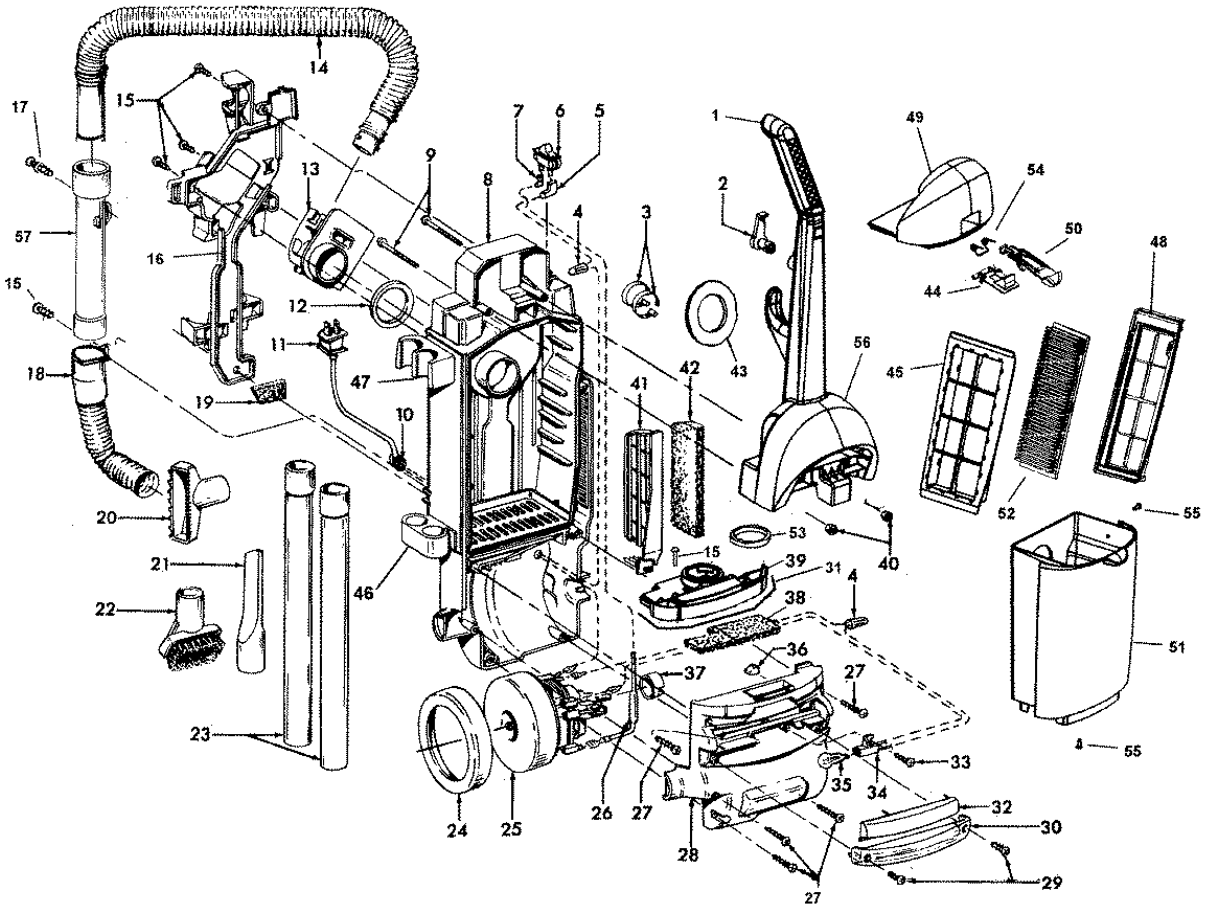

PARTS LISTING

MODEL NO.

C1701

ITEM	PART NUMBER	MODELS TO FIT	PART DESCRIPTION
1	39466065	C1701	UPPER HANDLE
2	39442048	C1701	CORD WRAP - MAGNESIUM GRAY
3	27479307	C1701	CABLE TIE
4	27618508	C1701	WIRE CONNECTOR
5		C1701	TERMINAL
6	28161075	C1701	SWITCH - TWO BLACK LEADS
7		C1701	TERMINAL
8	37259026	C1701	UPPER HOUSING - INCLUDES UPPER AND LOWER WAND HOLDER
9	40201149	C1701	HANDLE HARDWARE ASSEMBLY SCREWS 3-15/16”
10	27482231	C1701	STRAIN RELIEF
11	46583058	C1701	POWER CORD - 40’ SAFETY ORANGE
12	31178017	C1701	HOSE CONNECTOR GASKET
13	38641005	C1701	DIRT DUCT
14	304102001	C1701	HOSE ASSEMBLY COMPLETE - 8’
15	21447242	C1701	SCREW - SELF TAPPING
16	92001070	C1701	TOOL HOLDER
17	23149002	C1701	SCREW - SELF TAPPING
18	43431005	C1701	LOWER HOSE / INLET DOOR ASSEMBLY
19	43411004	C1701	WIRE OPENING SEAL
20	38614044	C1701	FURNITURE NOZZLE - GRAPHITE GRAY
21	38617027	C1701	CREVICE TOOL - DEEP SAND
22	43414197	C1701	DUSTING BRUSH ASSEMBLY - BLACK
23	38634078	C1701	EXTENSION TUBE - BLACK
24	36322037	C1701	MOTOR MOUNT - LARGE
25	27212070	C1701	MOTOR ASSEMBLY
	43566016	C1701	FAN
	41311017	C1701	MOTOR BRUSH
26	28382086	C1701	THERMAL PROTECTOR
	51873001	C1701	LABEL
27	21447230	C1701	SCREW - SELF TAPPING
28	37196159	C1701	MOTOR COVER
29	21447228	C1701	SCREW - SELF TAPPING
30	39383107	C1701	LENS
31	38781061	C1701	ROPE SEAL GASKET
32	37944010	C1701	COVER - DARK CHARCOAL GRAY

PARTS LISTING

MODEL NO.

C1701

ITEM	PART NUMBER	MODELS TO FIT	PART DESCRIPTION
33	21447072	C1701	SCREW
34	47173027	C1701	WIRING HARNESS
35	27313101	C1701	LAMP
36	34131019	C1701	WIRE OPENING PLUG
37	36322030	C1701	MOTOR MOUNT - SMALL
38	38765019	C1701	SECONDARY FILTER
39	36426066	C1701	SECONDARY FILTER RETAINER
40	21641558	C1701	HEX NUT - BLACK ZINC
	40201149	C1701	HANDLE HARDWARE ASSEMBLY SCREWS 3-15/16"
41	36426060	C1701	FILTER HOLDER
42	43613006	C1701	FINAL FILTER - HEPA ORDER 1 EA 38766008 AND 36426060
	40110004	C1701	FINAL FILTER / THREE LAYER - 2 PACK
	40110064	C1701	FINAL FILTER / EXHAUST - ALLERGEN 2 PACK
	38766008	C1701	FINAL FILTER - BULK
43	38784089	C1701	INTAKE SEAL
44	36151032	C1701	DIRT CUP LATCH
45	36426053	C1701	PRE-FILTER SCREEN
46	36433116	C1701	LOWER WAND HOLDER
47	36433117	C1701	UPPER WAND HOLDER
48	36426056	C1701	FILTER SUPPORT WITH OVERMOLD
49	37249029	C1701	DIRT CUP LID
50	38421104	C1701	LATCH ACTUATOR
51	91001054	C1701	DIRT CUP
52	40110008	C1701	PRIMARY DIRT CUP FILTER
53	38784084	C1701	DIRT CUP EXHAUST SEAL
54	38355015	C1701	TORSION SPRING
55	21447041	C1701	SCREW
56	39458027	C1701	CARRY HANDLE - BLACK
57	43457024	C1701	HOSE TUBE EXTENTION DOOR ASMBLY
	49811073	C1701	LEAD WIRE - RED
	39441016	C1701	CORD CLIP - BLACK
	21447236	C1701	SCREW - CORD CLIP
	27478456	C1701	CORD CLAMP
	43434042	C1701	EXTRA HOSE ASSEMBLY 20' - COMPLETE

ASSEMBLY SCHEMATIC

MODEL NO.

C1701

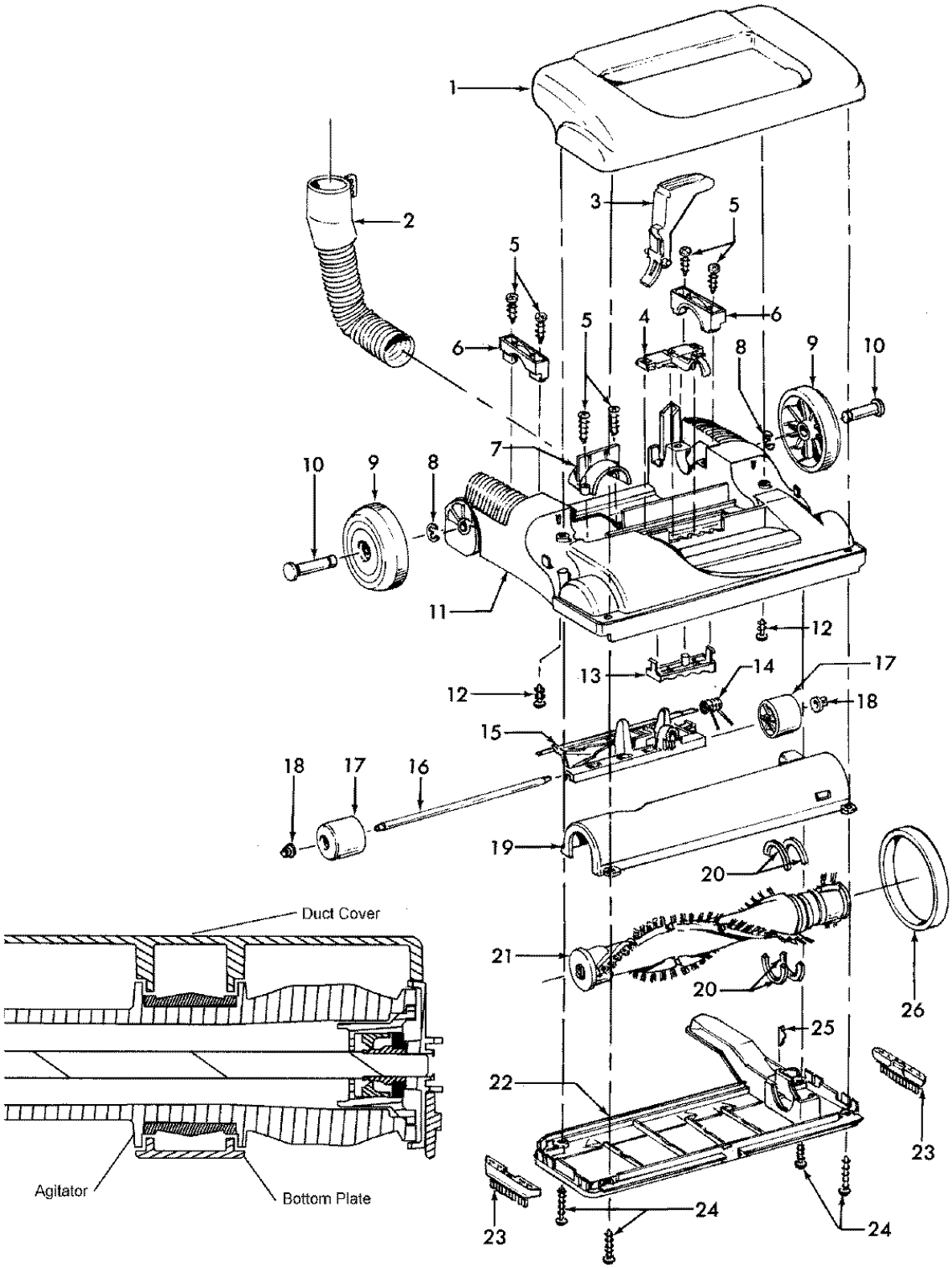

PARTS LISTING

MODEL NO.

C1701

ITEM	PART NUMBER	MODELS TO FIT	PART DESCRIPTION
1	37253291	C1701	HOOD / NOZZLE COVER - 13”
2	43431005	C1701	LOWER HOSE / INLET DOOR ASSEMBLY
3	38458043	C1701	HANDLE RELEASE LEVER
4	38421087	C1701	NOZZLE ADJUSTMENT LEVER - BLACK
5	21447072	C1701	SCREW
6	36131094	C1701	TRUNNION COVER - DARK CHARCOAL GRAY
7	36171044	C1701	HOSE CLAMP - DARK CHARCOAL GRAY
8	160017--	C1701	LOCK RING
9	43244009	C1701	REAR WHEEL - DARK CHARCOAL GRAY
10	32434007	C1701	REAR AXLE
11	37242140	C1701	MAIN BODY NOZZLE BASE - 13” DARK CHARCOAL GRAY
12	21447228	C1701	SCREW - SELF TAPPING
13	38563007	C1701	NOZZLE ADJUSTMENT CAM - CHARCOAL
14	38355010	C1701	TORSION SPRING
15	36432027	C1701	FRONT WHEEL SUPPORT - CLEAR
16	32541003	C1701	WHEEL SHAFT **ORDER #17 43248064**
17	43248064	C1701	FRONT WHEEL ASSEMBLY
18	36131056	C1701	WHEEL RETAINER
19	40309025	C1701	BOTTOM PLATE / DUCT - 13”
20	38781053	C1701	AGITATOR PULLEY SEAL
21	303996001	C1701	AGITATOR ASSEMBLY - 13” WOODEN
22	40309025	C1701	BOTTOM PLATE / DUCT COVER - 13”
23	39511018	C1701	LITTER PICKER - BLACK
24	21447121	C1701	SCREW
25	013261AY	C1701	RIB SHOE
26	38528033	C1701	BELT