Enhanced Clean™

handheld steam cleaner

steam mop Canister Steam Cleaner

38

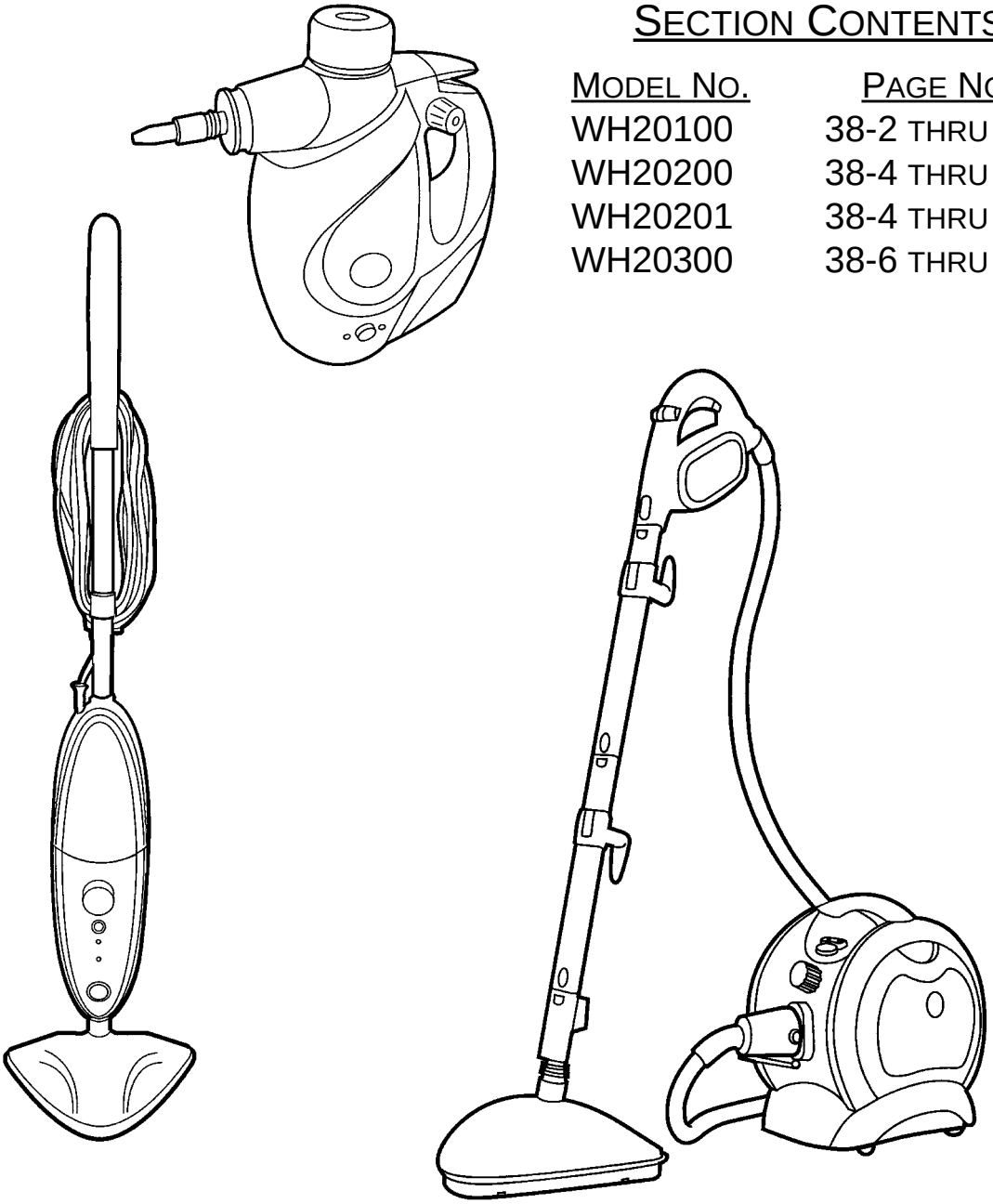

Section Contents

Model No.	Page No.
WH20100	38-2 thru 38-3
WH20200	38-4 thru 38-5
WH20201	38-4 thru 38-5
WH20300	38-6 thru 38-7

Model No.

WH20100
WH20200
WH20201
WH20300

* Pricing, specification's, and product availability are subject to change without notice. Pricing is FOB factory, Canton, OH
* All information contained within this service manual is proprietary information of TTI Floor Care North America.
* **WARNING:** To reduce the risk of electrical shock or injury, always disconnect the appliance cord from the electrical outlet or remove battery prior to servicing the unit.

ASSEMBLY SCHEMATIC

MODEL NO.

WH20100

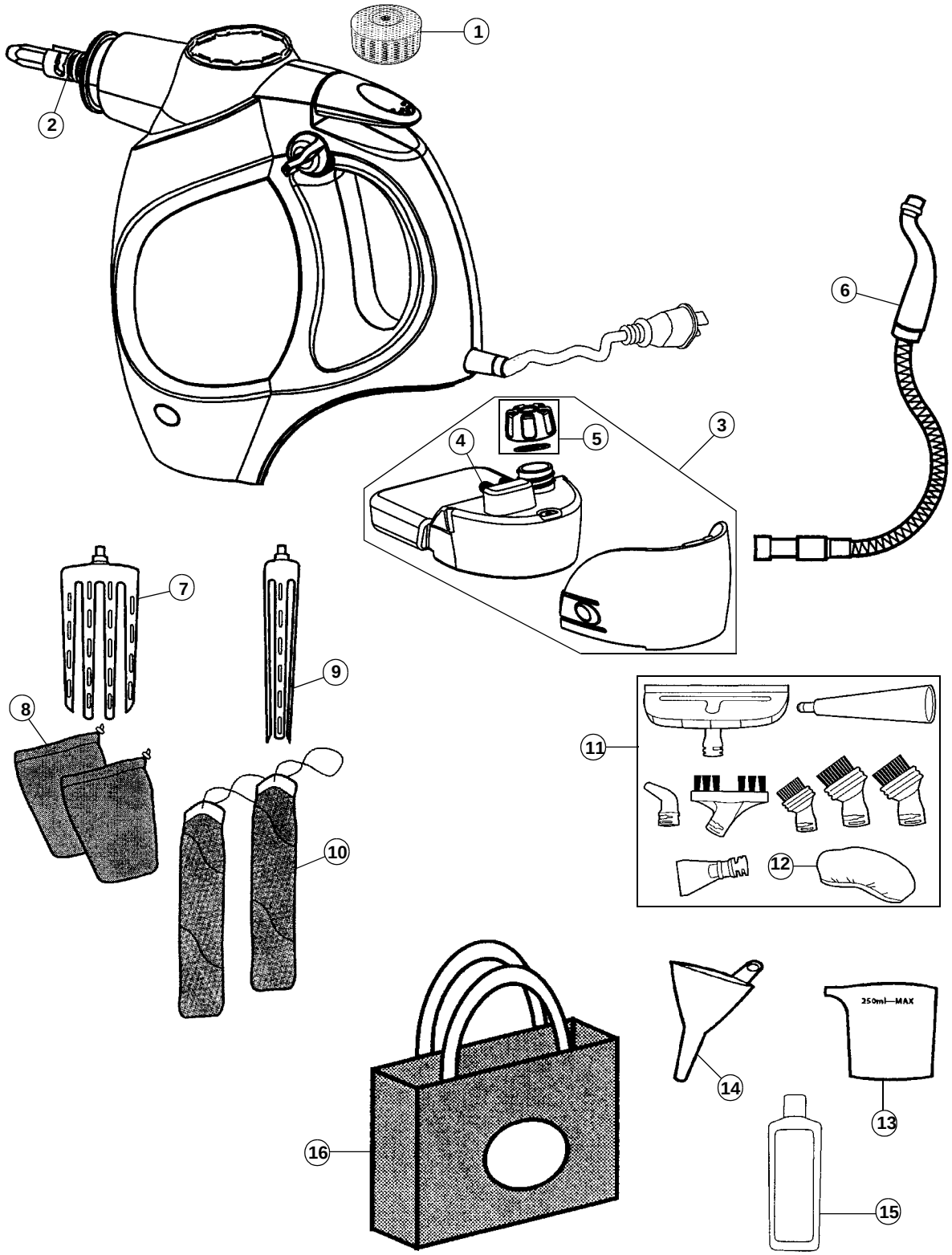

PARTS LIST

MODEL NO.

WH20100

ITEM	PART NUMBER	MODELS TO FIT	PART DESCRIPTION
1	440001711	WH20100	FILL SAFTEY CAP ASSEMBLY
2	440001798	WH20100	O-RING NOZZLE
3	440001714	WH20100	SOLUTION TANK ASSEMBLY
4	440001799	WH20100	O-RING SOLUTION TANK
5	440001715	WH20100	CAP ASSEMBLY - SOLUTION TANK
6	440001713	WH20100	HOSE ASSEMBLY
7	440001709	WH20100	WEDGE TOOL
8	440001795	WH20100	MICROFIBER PAD - WEDGE TOOL
9	440001710	WH20100	WAND TOOL
10	440001796	WH20100	MICROFIBER PAD - WAND TOOL
11	440001708	WH20100	ACCESSORY KIT
12	440001712	WH20100	GARMET CLOTH
13	440001793	WH20100	MEASURING CUP
14	440001706	WH20100	FUNNEL
15	440001603	WH20100	MULTI-PURPOSE DISINFECTANT SOLUTION - 8 OZ **ORDER WH00005**
	WH00005	WH20100	CLEANING SOLUTION - 8 OZ
	WH00010	WH20100	DISINFECTANT SOLUTION - 16 OZ
	WH00015	WH20100	CLEANING SOLUTION - 32 OZ
16	440001797	WH20100	CANVAS STORAGE BAG

ASSEMBLY SCHEMATIC

MODEL NO.

WH20200
WH20201

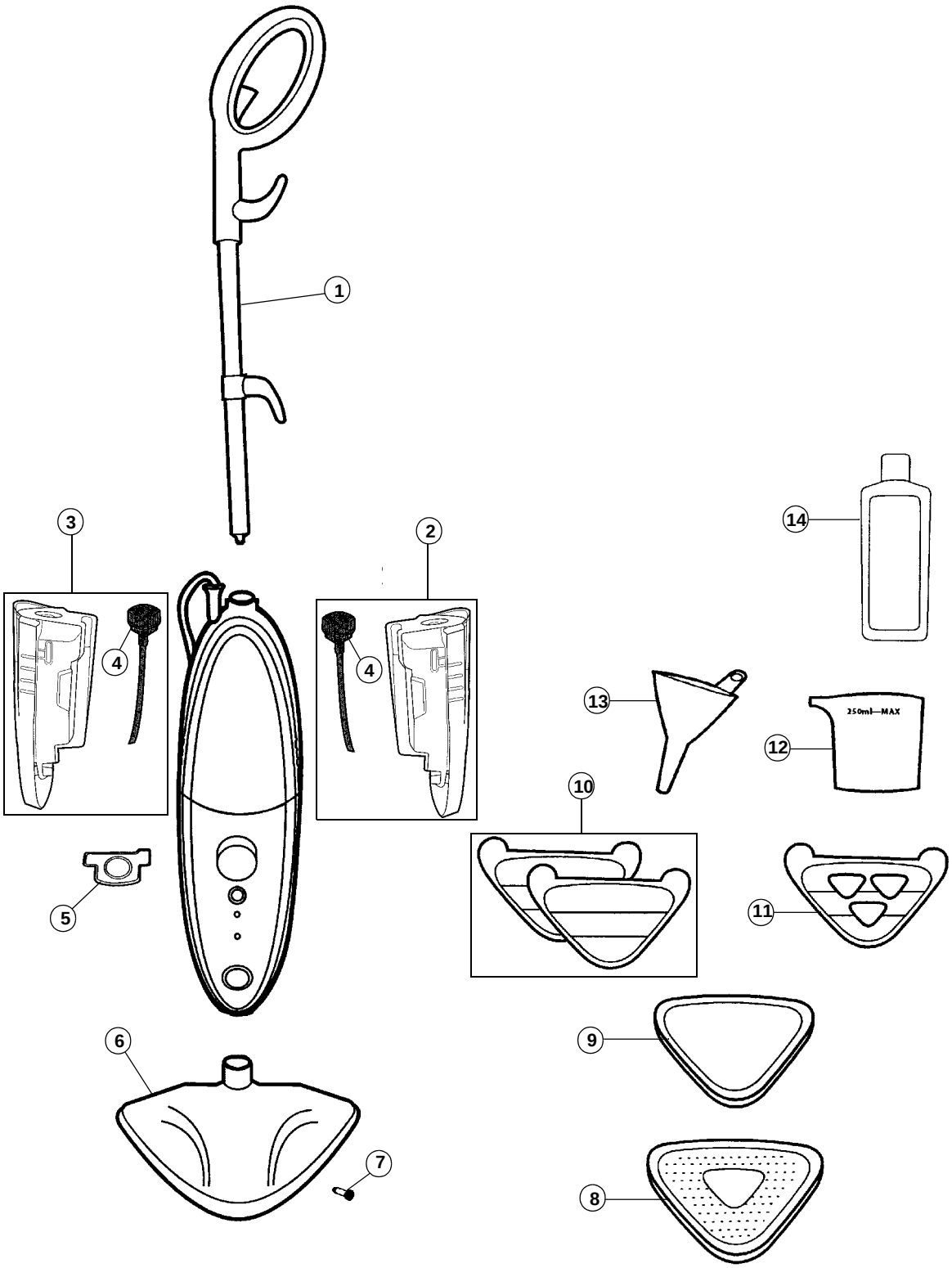

PARTS LIST

MODEL NO.

WH20200
WH20201

ITEM	PART NUMBER	MODELS TO FIT	PART DESCRIPTION
1	440001697	WH20200, WH20201	HANDLE ASSEMBLY
2	440001702	WH20200, WH20201	WATER TANK ASSEMBLY WITH CAP
3	440001701	WH20200, WH20201	SOLUTION TANK ASSEMBLY WITH CAP
4	440001703	WH20200, WH20201	CAP ASSEMBLY WITH TUBE
5	440001633	WH20200, WH20201	WATER FILTER ASSEMBLY
6	440001699	WH20200, WH20201	NOZZLE ASSEMBLY
7	440001700	WH20200, WH20201	SCREW - NOZZLE
8	440001704	WH20200, WH20201	COOLING TRAY / STORAGE BASE
9	440001694	WH20200, WH20201	CARPET GLIDE
10	440001695	WH20200, WH20201	CLEANING PAD
	WH01000	WH20200, WH20201	CLEANING PAD - 2 PACK
11	440001696	WH20200, WH20201	DISINFECTING PAD
12	440001698	WH20200, WH20201	MEASURING CUP
13	440001706	WH20200, WH20201	FUNNEL
14	440001603	WH20200, WH20201	DISINFECTANT MULTI-PURPOSE SUFACE SOLUTION - 8 OZ **ORDER WH00005**
	WH00005	WH20200, WH20201	CLEANING SOLUTION - 8 OZ
	WH00010	WH20200, WH20201	DISINFECTANT SOLUTION - 16 OZ
	WH00015	WH20200, WH20201	CLEANING SOLUTION - 32 OZ

Assembly Schematic

Model No.

WH20300

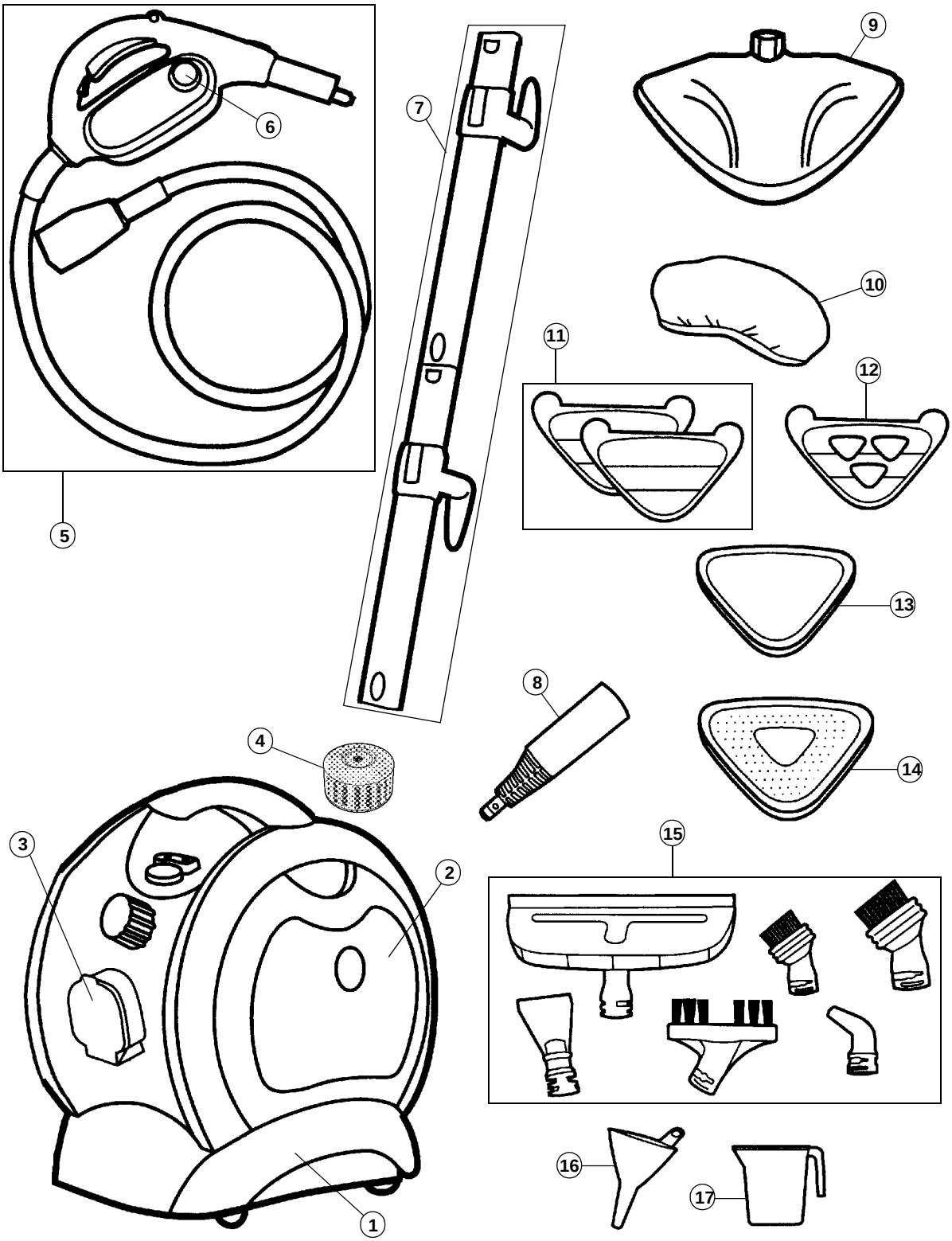

PARTS LIST

MODEL NO.

WH20300

ITEM	PART NUMBER	MODELS TO FIT	PART DESCRIPTION
1	440001879	WH20300	BASE ASSEMBLY WITH WHEELS
2	440001878	WH20300	TOOL DOOR (2)
3	440001875	WH20300	HOSE DOOR
4	440001874	WH20300	FILL SAFTEY CAP ASSEMBLY
5	440001881	WH20300	HANDLE AND HOSE ASSEMBLY
6	440001715	WH20300	CAP ASSEMBLY - SOLUTION TANK
7	440001880	WH20300	WAND ASSEMBLY
8	440001877	WH20300	TOOL ADAPTOR
9	440001699	WH20300	NOZZLE ASSEMBLY
10	440001712	WH20300	GARMENT CLOTH
11	440001695	WH20300	CLEANING PAD
	WH01000	WH20300	CLEANING PAD - 2 PACK
12	440001696	WH20300	DISINFECTING PAD
13	440001694	WH20300	CARPET GLIDE
14	440001704	WH20300	COOLING TRAY / STORAGE BASE
15	440001876	WH20300	ACCESSORY KIT
16	440001706	WH20300	FUNNEL
17	440001698	WH20300	MEASURING CUP
	440001603	WH20300	DISINFECTANT MULTI-PURPOSE SUFACE SOLUTION - 8 OZ **ORDER WH00005**
	WH00005	WH20300	CLEANING SOLUTION - 8 OZ
	WH00010	WH20300	DISINFECTANT SOLUTION - 16 OZ
	WH00015	WH20300	CLEANING SOLUTION - 32 OZ